Argus CO in-situ measurements for TES and MLS validation

Hans-Jürg Jost[1], J. P. Lopez[2], M. Loewenstein[2]
Ming Luo[3]

[1]Bay Area Environmental Research Institute
Sonoma, California

[2]Earth Science Division
Atmospheric Chemistry and Dynamics Branch
NASA Ames Research Center
Moffett Field, CA

[3]Jet Propulsion Laboratory

Bay Area Environmental Research Institute

Argus Instrument

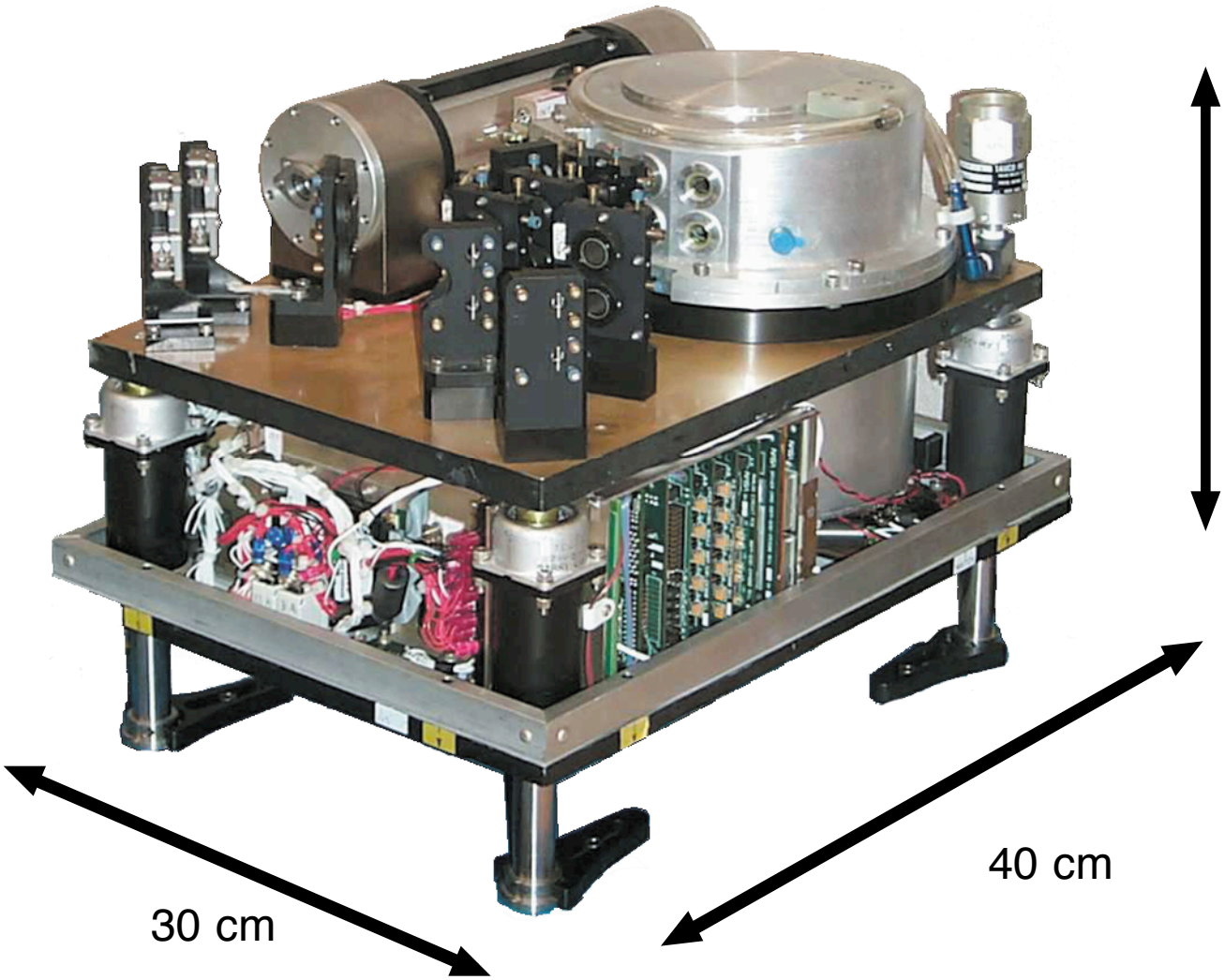

tunable diode laser

CO, N_2O at 4.5 μm
CH_4 at 3.3 μm

multipass cell 36 m

20 kg

precision:
<1.5 ppb CO

accuracy:
3%

Bay Area Environmental Research Institute

Argus Instrument

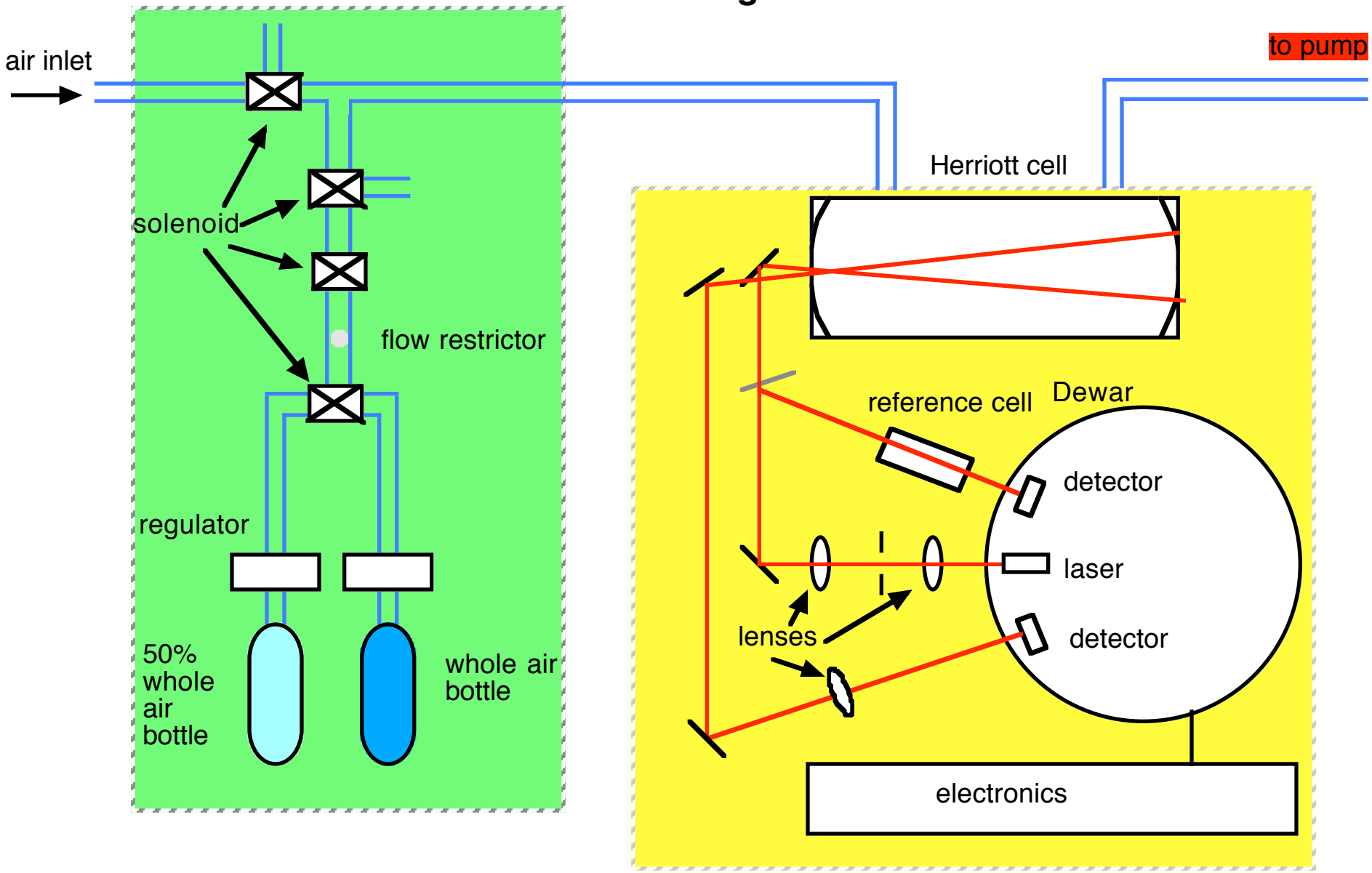

cal system

laser beam

Argus box

Bay Area Environmental Research Institute

Argus Instrument Heritage

100 kft

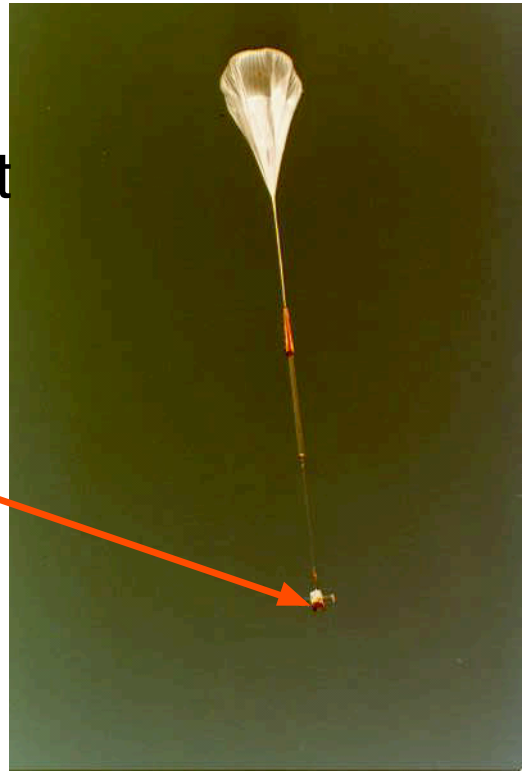

8 hrs

Bay Area Environmental Research Institute

Spatial Variability in CO

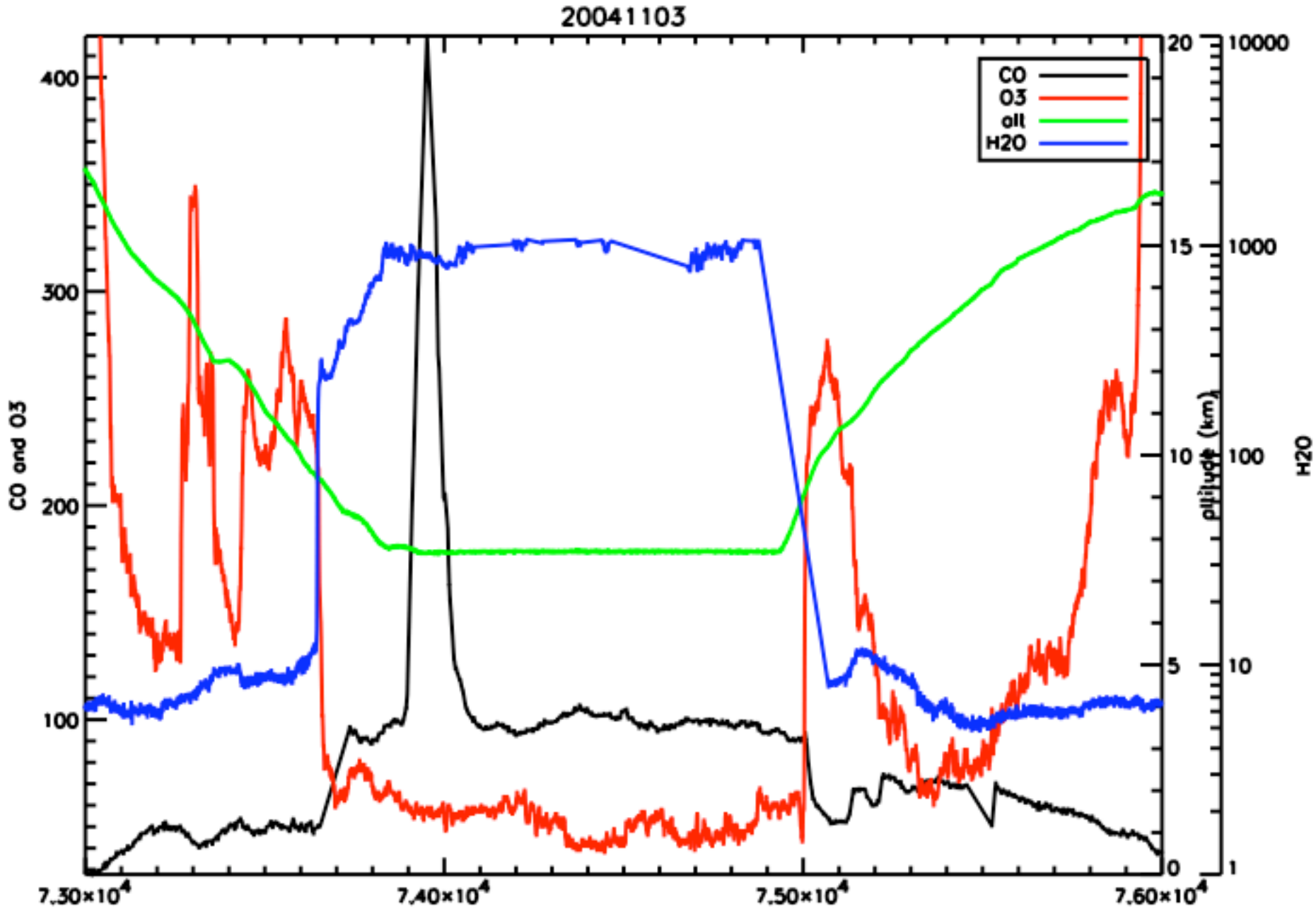

Bay Area Environmental Research Institute

Spatial Variability in CO

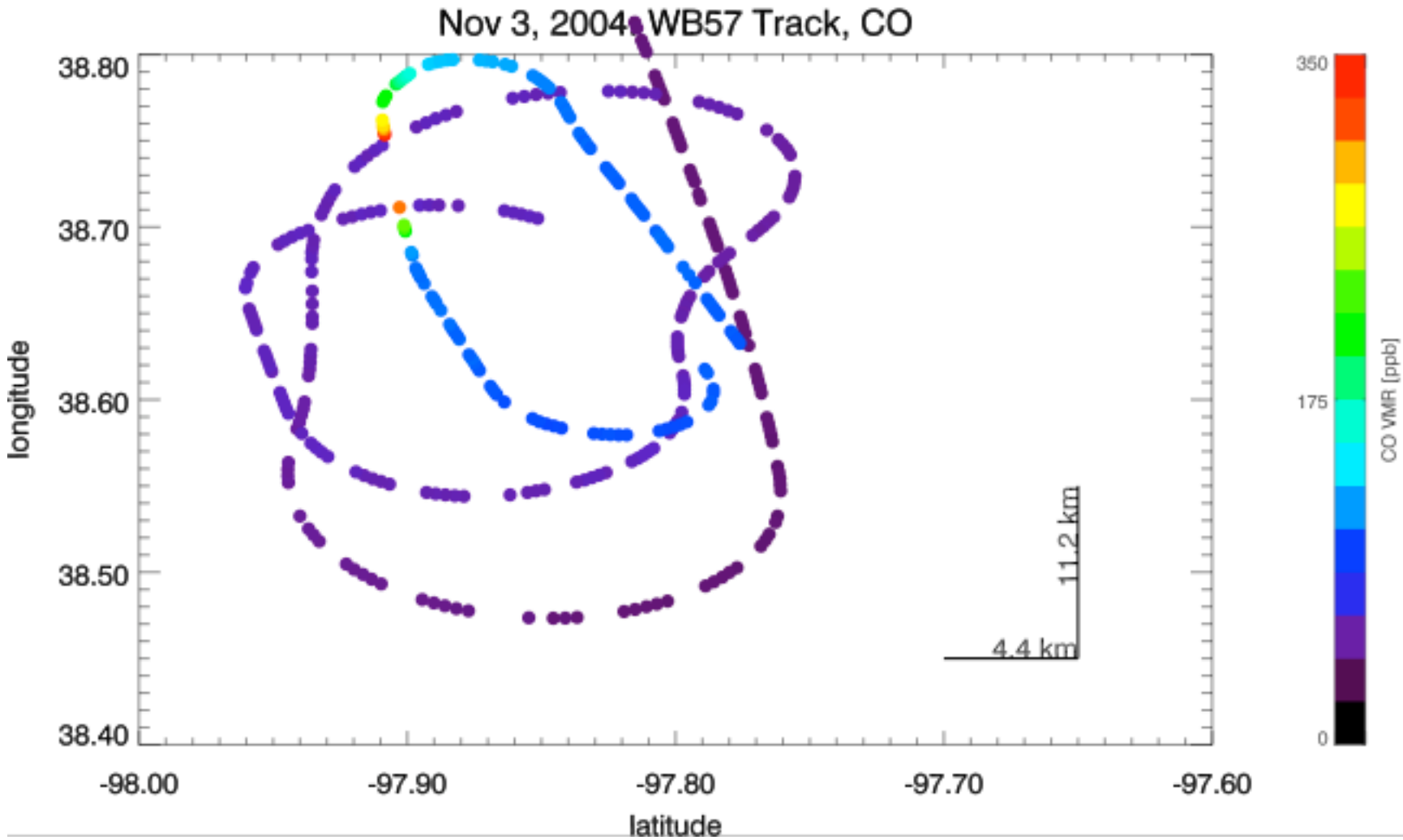

Bay Area Environmental Research Institute

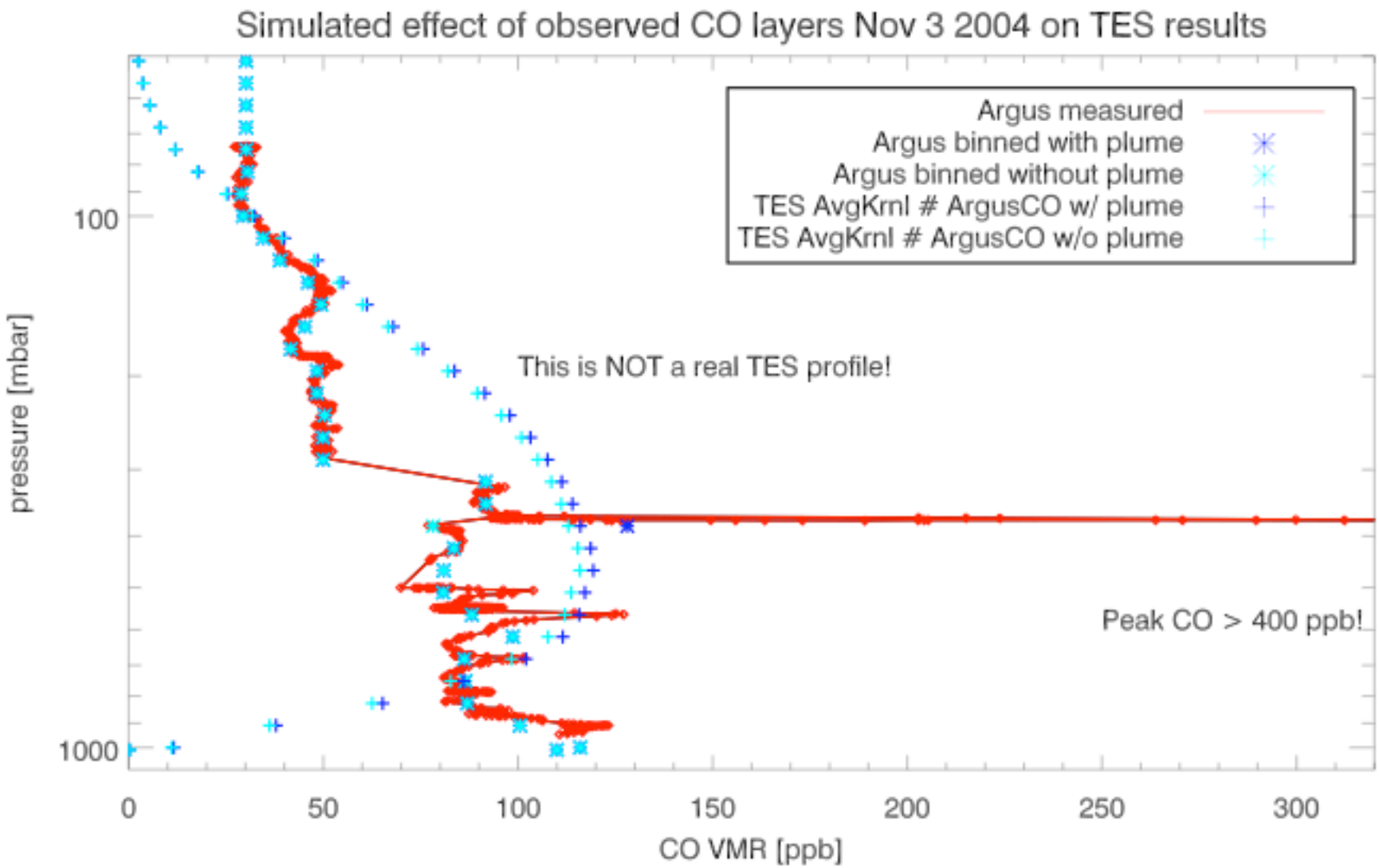

Bay Area Environmental Research Institute

What's next?

Finalize Balloon data sets

N2O analysis, refine CH4 analysis

Perform more studies on spatial variability of CO and its impact on validation

Hope for funding!

Bay Area Environmental Research Institute